Round container 80/69/T

Main parameters

Volume	80 *ml*
Lid diameter	69 *mm*
Height	39 *mm*

Can be used for automated lines
Compact one-to-one stacking
Suitable for microwave use

Logistics info

	Body	Lid	Set*
Pieces in a box (pcs.)	900	900	900
Size of boxes (mm.)	600x400x255	360x300x130	-
Weight of a box (kg.)	5,69	2,40	8,09
Volume (m^3)	0,072	0,017	0,089
Number of boxes (pcs.)	1	1	2
Number in pallet (pcs.)	25200	75600	-
Pallet weight (kg.)	143,7	223,1	-
Pallet height (m.)	1,94	1,97	-

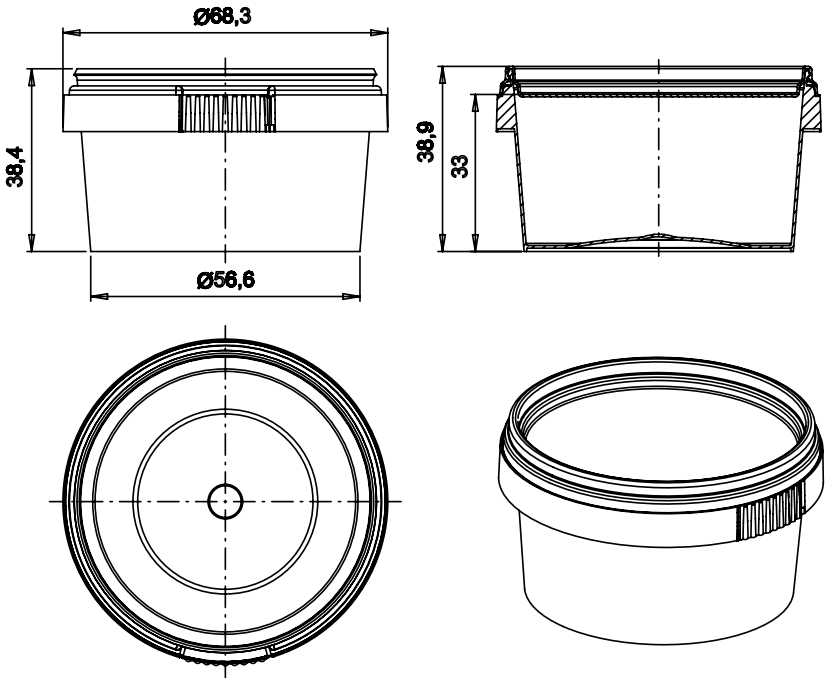

Joint stock venture "Perint",
Russia, 192102, Saint-Petersburg, Fuchika str. 12/2
Phone./fax (812)490-18-81, fax (812)490-18-82
e-mail: perint@perint.ru
www.perint.ru

Fish processing
Dairy products
Confectionery
HoReCa
Oil and fat
Gastronomy
Lacquers
Animal feed
Cosmetics
Hardware
Products for fishermen
Household chemicals